US009894977B2

(12) **United States Patent**
Willix

(10) **Patent No.: US 9,894,977 B2**
(45) **Date of Patent: Feb. 20, 2018**

(54) **PET NAIL FILING DEVICE**

(71) Applicant: **Bill Willix**, Boonton, NJ (US)

(72) Inventor: **Bill Willix**, Boonton, NJ (US)

(*) Notice: Subject to any disclaimer, the term of this patent is extended or adjusted under 35 U.S.C. 154(b) by 99 days.

(21) Appl. No.: **14/590,079**

(22) Filed: **Jan. 6, 2015**

(65) **Prior Publication Data**

US 2016/0192758 A1 Jul. 7, 2016

(51) **Int. Cl.**
A01K 13/00 (2006.01)
A45D 29/05 (2006.01)

(52) **U.S. Cl.**
CPC ***A45D 29/05*** (2013.01); ***A01K 13/00*** (2013.01)

(58) **Field of Classification Search**
CPC A01K 31/12; A01K 31/00; A01M 29/16
USPC 119/903, 531, 610; 340/573.1, 666
See application file for complete search history.

(56) **References Cited**

U.S. PATENT DOCUMENTS

2,076,734 A * 4/1937 Leindorf A01K 31/12 119/468
2,570,663 A * 10/1951 Guarino A01K 31/12 119/468
3,754,556 A * 8/1973 Watkins A45D 29/05 132/73.6
4,038,639 A * 7/1977 Kuebler ..... A01M 29/16 116/22 A
6,332,431 B1 * 12/2001 Brown A01K 13/00 119/468
7,428,881 B2 * 9/2008 Drelinger A01K 13/00 119/608
8,469,039 B2 * 6/2013 Jackson A01K 13/00 132/200
9,289,872 B1 * 3/2016 Altamirano B24B 9/06

* cited by examiner

Primary Examiner — Peter M Poon
Assistant Examiner — Jeffrey R Larsen
(74) *Attorney, Agent, or Firm* — Gloria Tsui-Yip; Wendi E. Uzar

(57) **ABSTRACT**

A filing device that allows an animal to have its nails trimmed without human interaction or interference. The filing device includes a casing, a rod, a wall, housing, cap, motor, motor cover and power source. The rod is concentrically nested within the casing and covered in a grit material. The casing has a cutout on its bottom or top surface that allows the rod to be exposed. The rod is powered by a motor and when the power is turned on it causes the rod to rotate. An animal may mount itself on the casing of the filing device. When the motor is turned on it vibrates the device which causes the quick within the animal's vein to retract. As the animal sits on the casing its nails are exposed to the rotating rod which causes the nails to be filed.

9 Claims, 9 Drawing Sheets

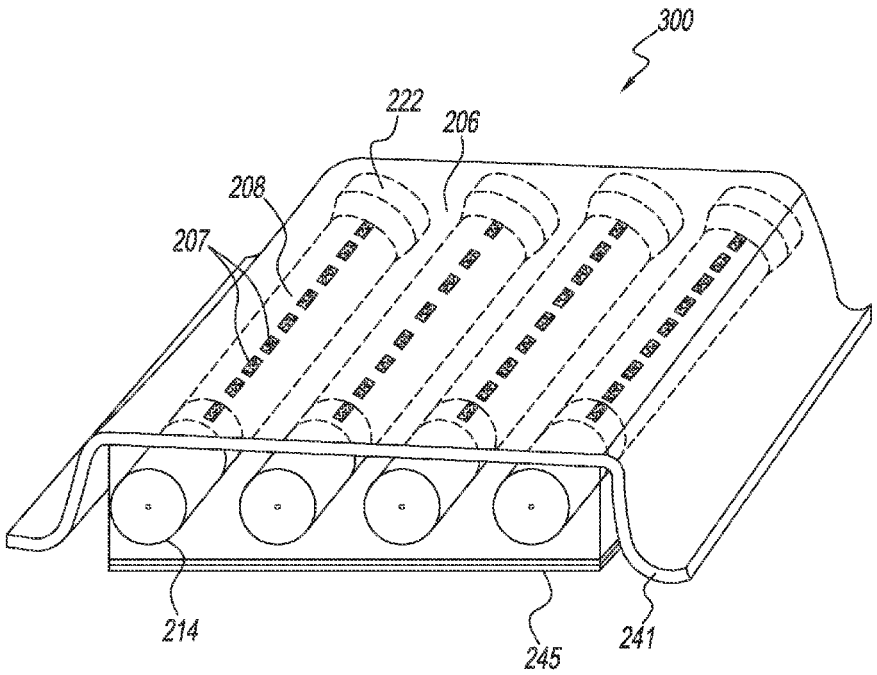

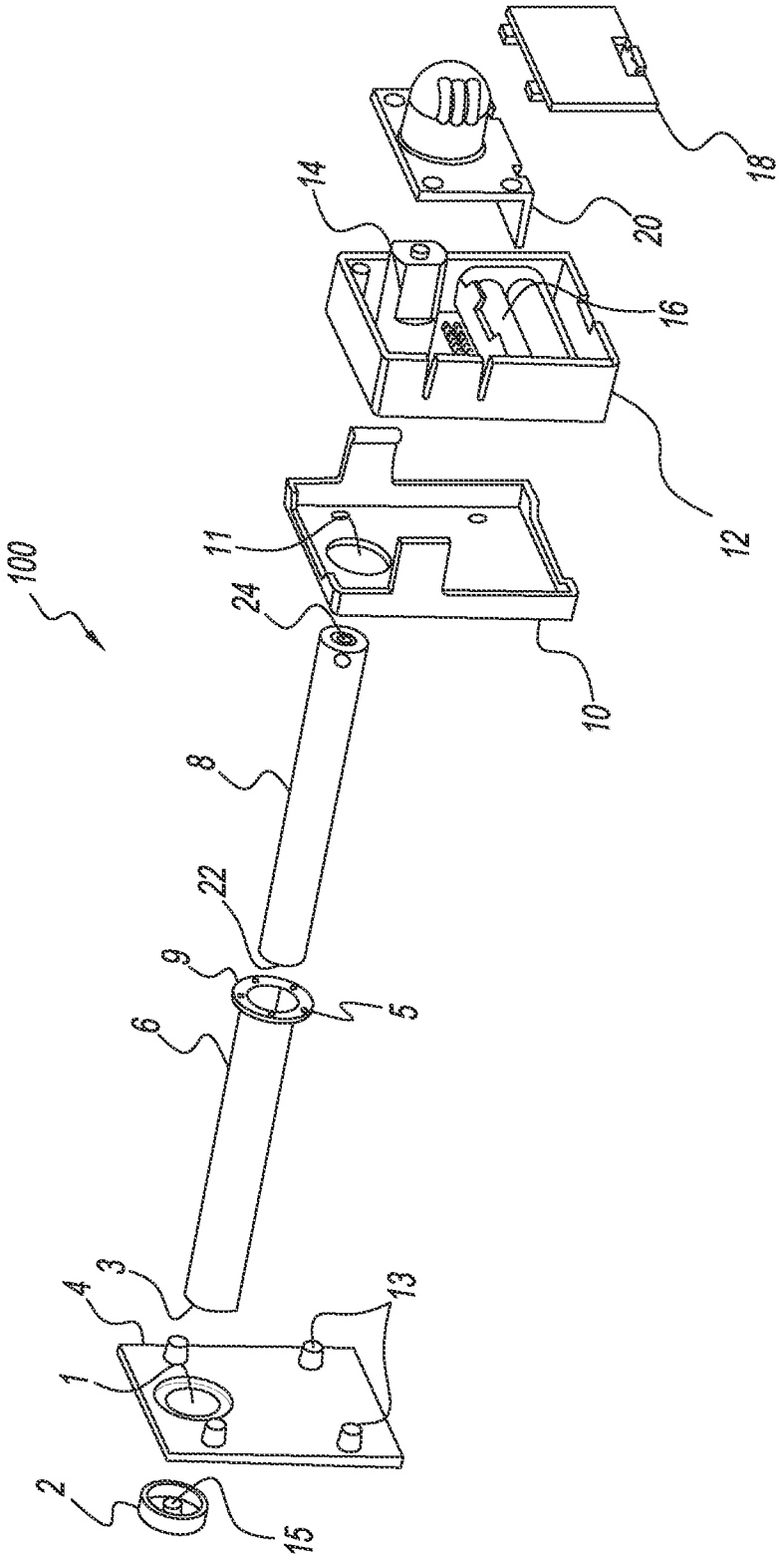

FIG. 1

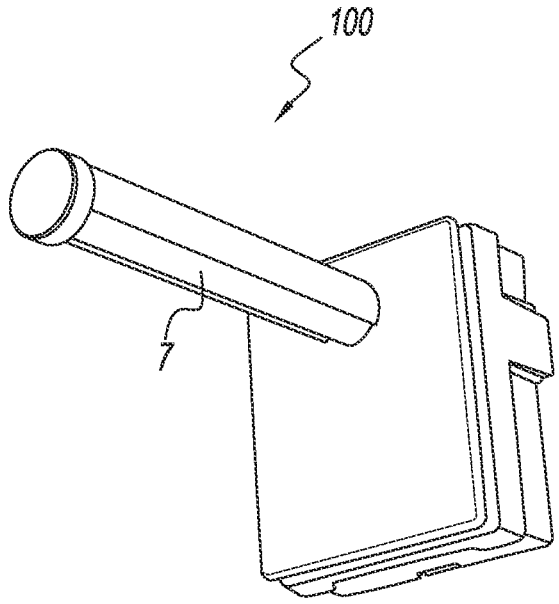

FIG. 2

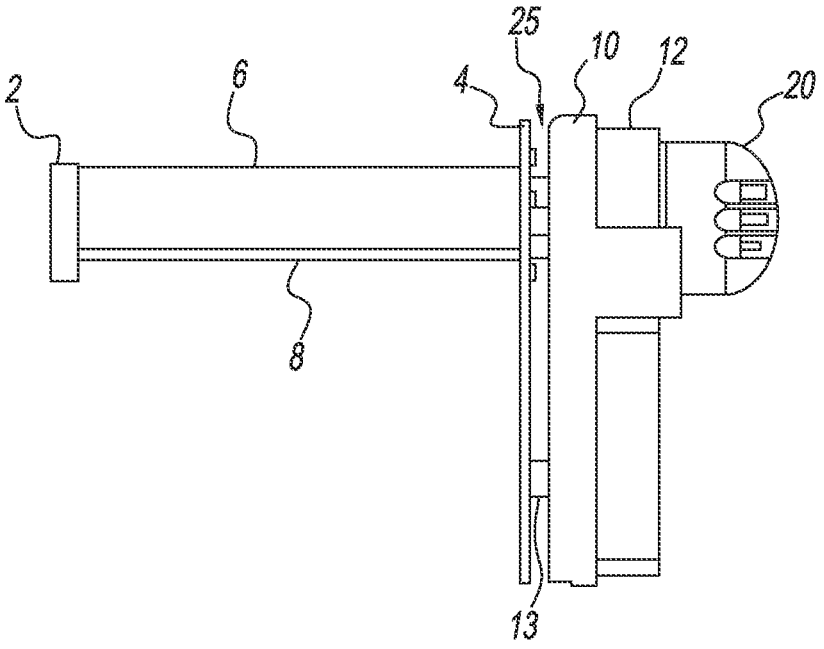

FIG. 3

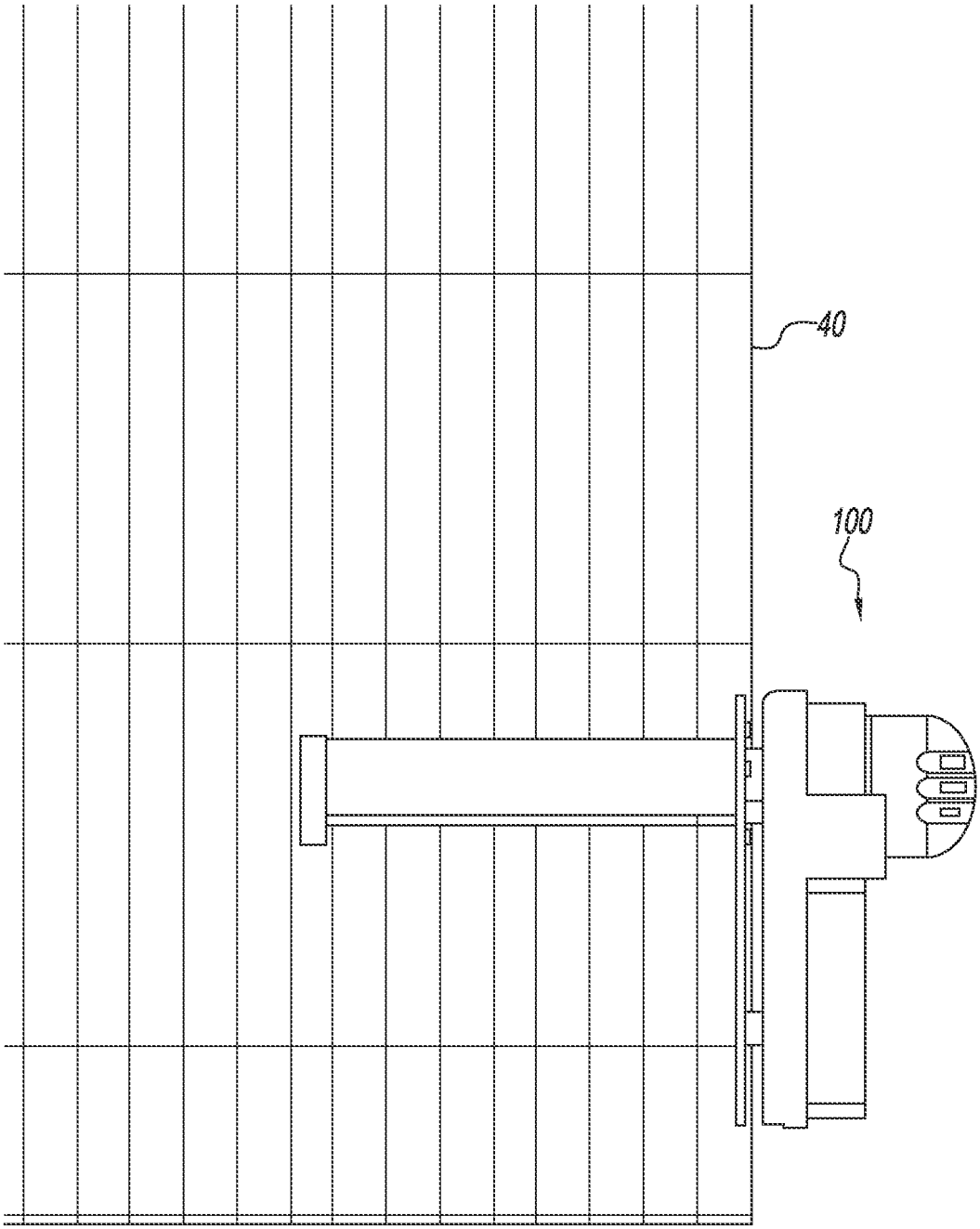

FIG. 4

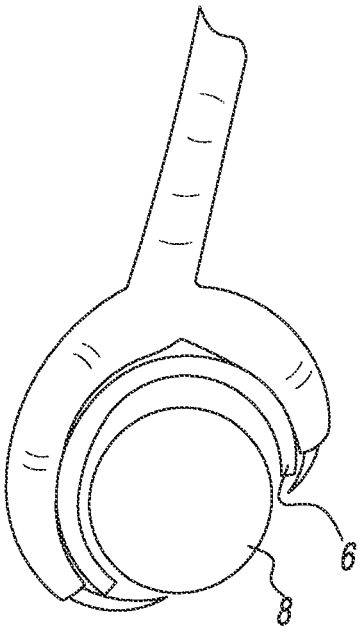

FIG. 5

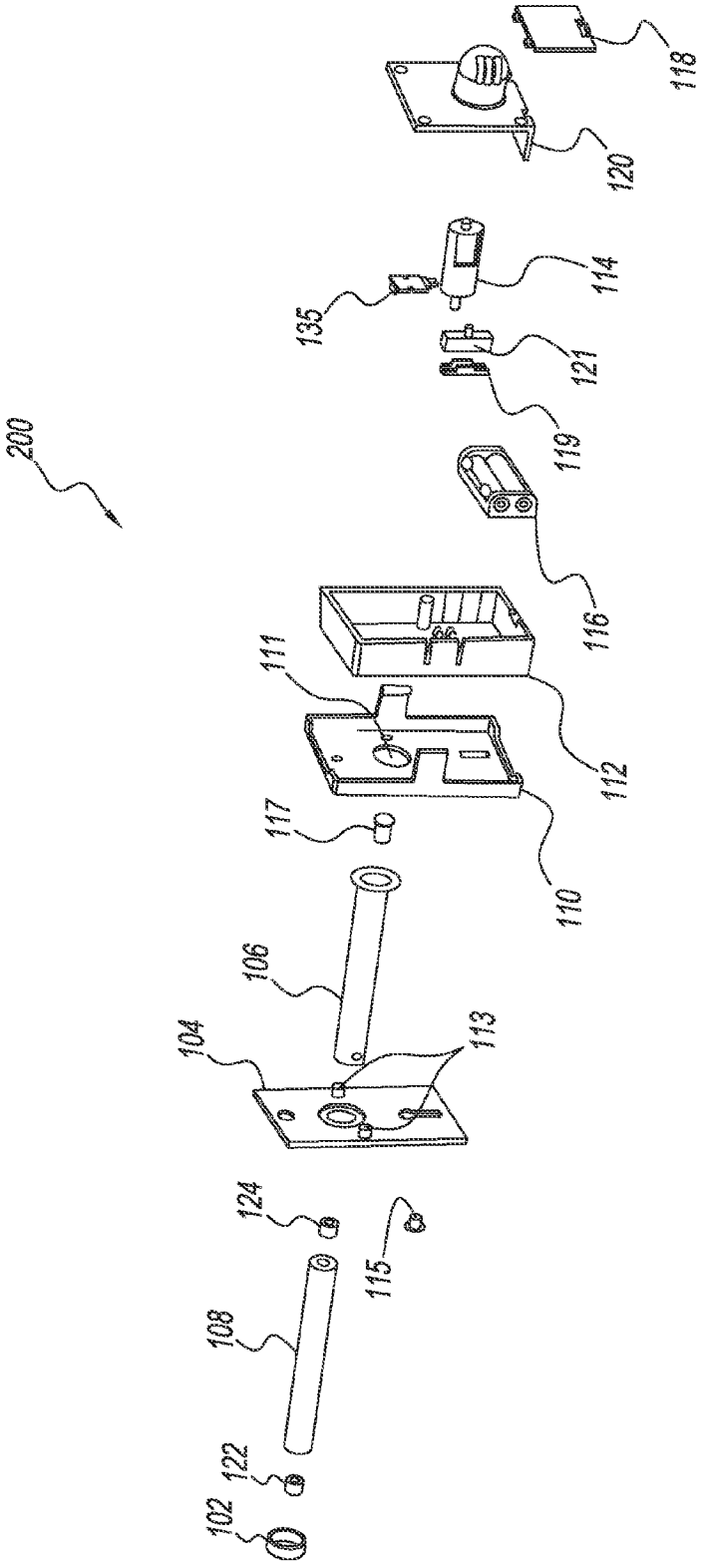
200
102
122
108
124
115
104
106
113
117
110
111
112
116
119
121
135
114
120
118

FIG. 6

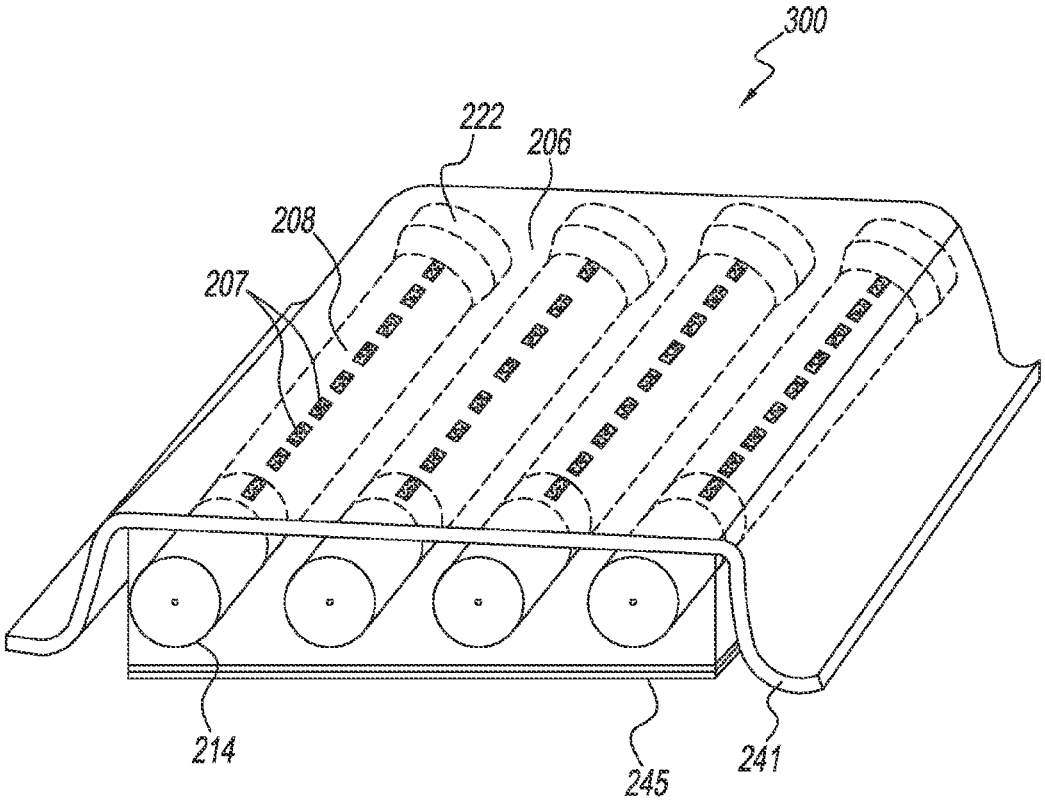

FIG. 7

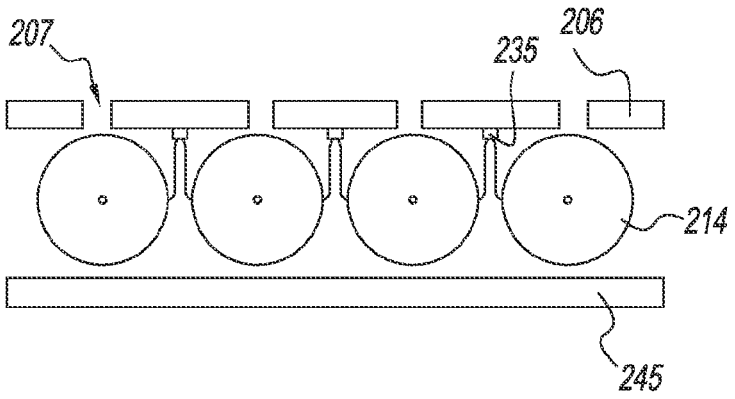

FIG. 8

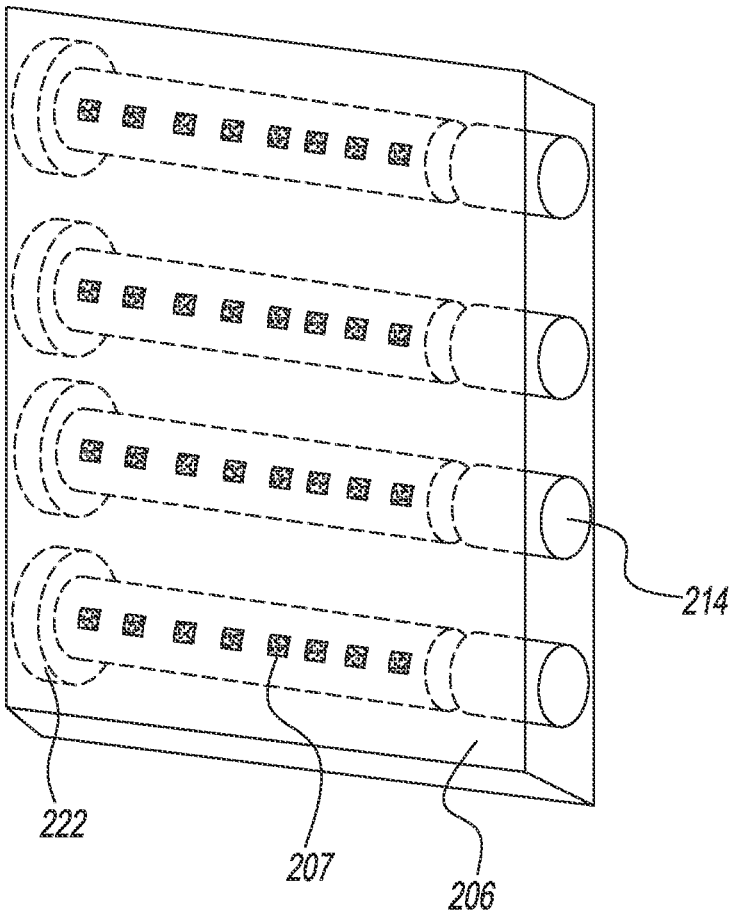

FIG. 9

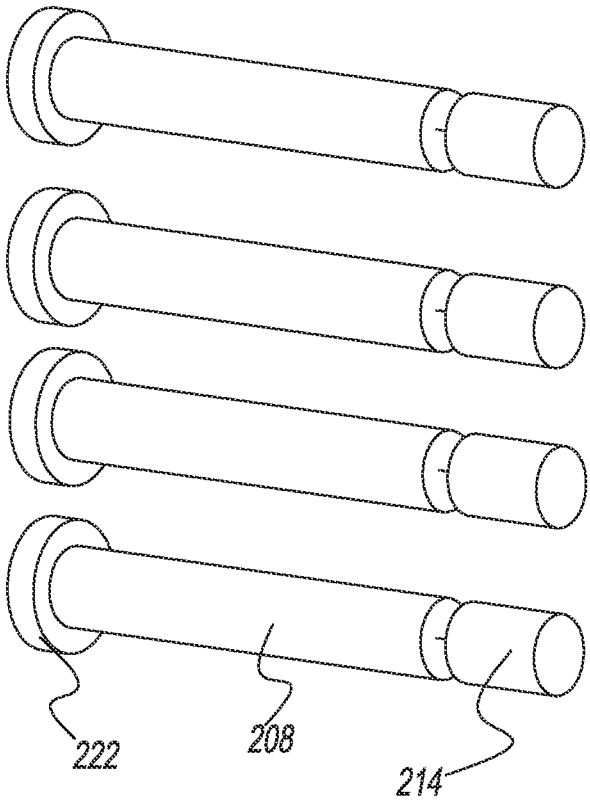

FIG. 10

PET NAIL FILING DEVICE

FIELD OF THE INVENTION

The invention relates to a device for grooming pets. In particular, an improved device that automatically and safely trims and/or files a pet's nails while the animal is standing on the device. The device causes the vein inside the nail, known as the quick, to recede in the nail and therefore allows for the animal's nails to be trimmed safely. The device further provides use without the assistance of or interference from a human or owner of the pet.

BACKGROUND OF THE INVENTION

Grooming devices are commonly used to trim a pet's nails. Generally a pair of scissors or nail clippers are used to trim an animal's nails or claws. Scissors and nail clippers have serious set backs including the potential of causing serious pain and injury to the pet if the claws are clipped too much. Each animal has a vein in each of its nails, known as the quick. Depending on the animal, including the breed and type of animal, the quick extends for a certain distance in the nail. If a user is not careful and experienced, they can cut the quick of the animal during grooming. This causes extreme pain and bleeding to the animal. Additional drawbacks of scissors and clippers include the animal seeing the device during the grooming process and resisting the process. This can make it extremely difficult to restrain the pet in order to cut its nails. Scissors and nails can also fail if the pet's nails are very thick or cause the animal's nails to become jagged.

Additional devices are known in the art to cut an animal's nails such as electric handheld rotary filing devices. These devices, such as a Dremel® rotary tool, grind an animal's nails while the user holds the tool and the animals' nail must be held abutting the device. The rotary filing devices have numerous drawbacks including the fact that it is difficult to hold the animal's nail to the filing device, especially when the animal is scared of the device or its sound. Further, these devices do not address the fact that the speed and direction of the filing device should be adjusted in accordance with the type, breed and size of the animal.

Therefore, there is a need for a nail filing device that automatically, effectively and safely trims an animal's nails without the owner's assistance.

SUMMARY OF THE INVENTION

The present invention is a stationary filing device for safely trimming a pet's nails while the animal is standing or mounts the device without human intervention. The device is configured to cause motion which causes the vein inside the nail, known as the quick, to recede in the nail which allows for the animal's nails to be trimmed safely.

The device for filing an animal's nails comprises at least one rod, each rod having a grit material on at least a portion of its surface, a casing having a first end, a second end, a top, a bottom, and at least one cutout on said casing, said casing is sized to partially cover and nest said rod therein, a motor connected to and rotates the rod within the casing which remains fixed, the rotation of the rod causing the casing to vibrate, and a power source, connected to and provides power to the motor, wherein an animal's nail is adapted to abut the rotatable rod to be filed when it is standing on said casing without human interaction.

The grit material can be sand paper and preferably the rod has a circular cross section. In one embodiment the cutout of the casing allows the bottom portion of the rod to be exposed when the rod is concentrically nested within the casing. The rod has a first end and a second end. The first end of the rod has a first bushing. The second end of the rod has a second bushing. It is contemplated that the cap contains an attachment member that is sized or shaped to mate with the first bushing of the rod.

The speed that the rod rotates is specifically set based upon the type and breed of animal using the device. For a bird, the speed is set to 10 revolutions per minute. If the device is used for a hamster, guinea pig or other small rodents the speed will be slightly higher as the nails of those animals are harder and the speed would be set to 12 or 14 revolutions per minute.

When the filing device is turned on the rod rotates which causes the casing to vibrate. When a bird, or other animal, stands on the filing device their claws wrap around the casing with the ends of their nails lining up with the casing cutout and exposing the animal's nails to the rod. The vibration of the casing has been found to be pleasurable to the animal which encourages the animal to remain on the casing. The vibration also causes the quick, or vein in the animal's nails, to retract. The refraction of the quick provides a huge advantage in that it allows the animal's nails to be filed without risking harm to the animal. As the rod turns, the grit material or sand paper comes in contact with the animal's nails and files them. In most instances the animal may even be unaware that the filing is taking place.

In one embodiment of the present invention the filing device further comprises a sensor which allows the filing device to be turned on and off depending on whether an animal is mounted on the casing. The sensor may be a motion detection sensor, a proximity sensor, a pressure sensor or other sensors known to one skilled in the art. Without a sensor, the device may be switched on and off at the pet owner's option via a manual or remote switch known to one skilled in the art.

BRIEF DESCRIPTION OF THE DRAWINGS

A preferred embodiment of the present invention has been chosen for purposes of illustration and description and is shown in the accompanying drawings forming a part of the specification wherein:

FIG. **1** is an exploded view of a first embodiment of the filing device of the present invention.

FIG. **2** is a perspective view of the assembled first embodiment of the present invention.

FIG. **3** is a side view of the present invention.

FIG. **4** is a side view of the present invention installed in a cage.

FIG. **5** is a cross sectional view of the perch of the present invention with a bird standing on the perch.

FIG. **6** is an exploded view of a second embodiment of the filing device of the present invention.

FIG. **7** is a perspective view of a third embodiment of the filing device of the present invention.

FIG. **8** is a side view of the third embodiment of the filing device of the present invention.

FIG. **9** is a top perspective view of the third embodiment of the filing device of the present invention.

FIG. **10** is a top perspective view of the third embodiment of the filing device of the present invention with the cover removed.

DETAILED DESCRIPTION OF THE PREFERRED EMBODIMENTS

With reference to the drawings, wherein the same reference number indicates the same element throughout, there is

shown in FIG. **1** an exploded view of a filing device **100** of the present invention. As shown in FIG. **1**, the filing device **100** includes a cap **2**, wall cover **4**, casing **6**, rod **8**, wall **10**, housing **12**, motor **14**, motor cover **20**, power source **16** and power source cover **18**.

As shown in FIG. **1**, tubular casing **6** has a first end **3**, a second end **5**, a top, and a bottom. The wall cover **4** has an aperture **1** sized to accept the casing **6** therethrough. In the preferred embodiment the casing **6** and the aperture **1** have circular cross sections. The wall cover **4** has at least one tab **13** that extends out from the wall cover **4**.

The first end **3** of the casing **6** is sized to extend through the aperture **1** of the wall cover **4** and frictionally accept the cap **2** thereon when the filing device **100** is assembled. The second end **5** of the casing **6** has an enlarged flange **9** extending therefrom. The casing **6** has a cutout **7** (as shown in FIG. **2**) on the bottom surface. The casing **6** is internally sized to cooperatively mate with and concentrically nest the rod **8** therein.

The rod **8** is preferably covered with a grit material such as sand paper and has a circular cross section. The cutout **7** of the casing allows the bottom portion of the rod **8** to be exposed when the rod is concentrically nested within the casing **6**. The rod **8** has a first end and a second end. The first end of the rod **8** has a first bushing **22**. The second end of the rod **8** has a second bushing **24**. It is contemplated that the cap **2** contains an attachment member **15** that is sized or shaped to mate with the first bushing **22** of the rod **8**.

The wall **10** has an aperture **11** sized to accept the second end of the rod **8** therein. The flange **9** of the casing **6** abuts the wall **10** and surrounds the aperture **11** when the casing **6** is affixed to the wall **10**. Screws, nails or other fastening devices known in the art may be used to affix the flange **9** to the wall **10**.

As shown in FIG. **1**, the housing **12** has an interior area and holds the motor **14** and power source **16**. A motor cover **20** is affixed to the housing **12** to enclose the motor. A power source cover **18** is affixed to the housing **12** to enclose the power source. In the present embodiment of the present invention the power source **16** is one or more batteries. The power source **16** is connected to and provides power to the motor **14**. The motor **14** is connected to and is capable of rotating the rod **8** within the casing **6** which remains stable. The rotation of the rod **8** causes the casing **6** to vibrate.

The wall **10** affixes to the housing **12** by a snap fit. As shown in FIG. **3**, when the wall **10** is affixed to the housing **12** the two or more tabs **13** of the wall **10** create an gap **25** between the wall cover **4** and the wall **10**. As shown in FIG. **4**, the filing device **100** is to be attached to a bird cage or other animal cage **40**. The gap **25** in coordination with tabs may be utilized for installation and encasement of the frame of the cage therein allowing the casing **6** and wall cover **4** to be within the cage **40** while the wall **10** and housing **12** are outside of the cage **40**.

The speed that the rod **8** rotates is specifically set based upon the type and breed of animal using the device. For a bird, the speed is set to 10 revolutions per minute. If the device is used for a hamster, guinea pig or other small rodents the speed will be slightly higher as the nails of those animals are harder and the speed would be set to 12 or 14 revolutions per minute.

As described above, when the filing device **100** is turned on the rod **8** rotates which causes the casing **6** to vibrate. When a bird, or other animal, stands on the filing device **100** their claws wrap around the casing **6** with the ends of their nails lining up with the casing cutout **7** and exposing the animal's nails to the rod **8**. The vibration of the casing **6** has been found to be pleasurable to the animal which encourages the animal to stand on the casing **6**. The vibration also causes the quick, or vein in the animal's nails, to retract. The refraction of the quick provides a huge advantage in that it will allow the animal's nails to be filed without risking harm to the animal. As the rod **8** turns, the grit material or sand paper comes in contact with the animal's nails and files them. In most instances the animal may even be unaware that the filing is taking place.

Once installed in the cage **40** of an animal, such as a bird, the filing device **100** of the present invention becomes apart of the animals habitat. In a bird cage, for example the filing device also serves as a perch. As shown in FIG. **5**, an animal, such as a bird mounts itself on the filing device **100** with no aid of a human. Once mounted on the filing device **100**, a bird's nails wrap around the device **100** and are exposed to the rod **8**. When the device **100** on the rod **8** rotates, the rotating grit files the nails of the animal.

Although FIG. **4** shows a birdcage, it can be installed in cages for other types of animals and in which case the device **100** may be positioned towards the floor board of the cage. It may also be incorporated as part of the floorboard.

In one embodiment of the present invention the filing device **100** further comprises a sensor which allows the filing device **100** to be turned on when an animal mounts itself on the casing **6**. The sensor may be a motion detection sensor, a proximity sensor, a pressure sensor or other sensors known to one skilled in the art. Without a sensor, the device **100** may be switched on and off at the pet owner's option via a manual or remote switch known to one skilled in the art (not shown).

The grit or sandpaper is affixed to rod **8** using methods known to one skilled in the art such as adhesive, Velcro, etc. The sandpaper can be removed and replaced by un-affixing it from the rod **8** and affixing a new piece of sandpaper. It is also contemplated that the entire rod **8** made having grit or sandpaper affixed thereto may be replaced from the device and the old rod discarded. Rods **8** may have different grit size depending on the type and size of the animal and its nails.

Casing **6** may be made of a non-slip material or covered with a non-slip material. To improve the comfort of the animal standing on the casing **6**, it may be cushioned such as using a silicone, neoprene or rubber material.

FIG. **6** shows a second embodiment of the filing device **200** of the present invention. As shown in FIG. **6**, the filing device **200** is similar to the filing device **100** in that the housing **112** has an interior area and holds the motor **114** and power source **116**. A motor cover **120** is affixed to the housing **112** to enclose the motor **114**. A power source cover **118** is affixed to the housing **112** to enclose the power source **116**. The power source **116** is one or more batteries. The power source **116** is connected to and provides power to the motor **114**. The motor **114** is connected to and is capable of rotating the rod **108** within the casing **106** which remains stable. The rotation of the rod **108** causes the casing **106** to vibrate.

The filing device **200** also contains switch holder **119** and on/off switch **121** which is connected to and capable of controlling the power source **116**. The filing device **200** also includes a motion sensor PCB module **135** which is capable of controlling power to the device **200** based on motion of an animal. The motion sensor **135** is located within the main housing **112** and controls the motor **114**. The sensor **135** works to turn the device **200** on when an animal steps on or puts pressure on the perch **106**. The filing device **200** further comprises at least one cage assembly floating pin **115** to aid

in the installation of the device to an animal cage **40**. The remaining components of the filing device **200** are akin to those of the filing device **100** as shown in FIGS. **1-5**.

FIG. **7** shows another embodiment of the present invention as it relates to a rug nail filing device **300**. As shown in FIG. **7**, casing **206** covers the entire nail filing device **300** which comprises a plurality of rods **208** that are arranged to be parallel to one another. The rods **208** have a first end and a second end. The first end of the rod **208** is connected to a motor **214**. The motor **214** is connected to a power source **216** (not shown). The power source **216** provides power to the motor **214**. The motor **214** is connected to the rod **208**. Therefore, when the motor **214** is provided with power, it causes the rod **208** to rotate. The rod **208** is either made from or covered in a grit material or sand paper. The second end of the rod **208** is connected to a bushing **222**.

The casing **206** has a plurality of cutouts **207** that allow access from above the casing **206** to the rods **208**. The cutouts **207** are designed and sized to accept the nails or claws of animals such as dogs, cats, rabbits, etc. When an animal stands on the rug device **300** its nails extend through the cutouts **207** and are put in contact with the rods **208** which causes the animal's nails to be trimmed.

In one embodiment of the present invention a sensor **235** is utilized in cooperation with the casing **206** between the rods **208** and installed under, above or near the casing **206**. The sensor **235** allows the device **300** to be powered on from the movement, weight or pressure of an animal. It is contemplated that the rug device **300** further comprises a tray **245** that is located below the rods **208** or sits on the ground to catch the debris that results from the trimming of the animal's nails or claws. The casing **206** further comprises two ends **241** extending from the casing from the top of the device **300** to cover the motors **214**, rods **208** and bushings **222**. The casing **206** and the two ends **241** can be made of or covered with a soft material such as rubber, silicone or neoprene. FIG. **9** shows a top view of the rug device **300**. FIG. **10** shows the assembly of rods **208**, the motors **2014** and the bushings **222** with the casing removed. It is contemplated that the rug device **300** of the present invention be used as a stand alone unit and placed in front of the animal's food to entice them to stand on it without human interaction or interference and have their nails trimmed. It is also contemplated that the rug device **300** be incorporated into other products such as an animal or pet carry or travel bag. The rug device **300** can be placed at a location where it is leveled and flushed against a floorboard.

All the filing devices of the present invention, including filing devices **100**, **200**, and **300**, are the same product doing the same job (causes the quick of an animal to retreat), but in different shapes to fit or accommodate different pets.

The features of the invention illustrated and described herein are the preferred embodiments. Therefore, it is understood that the appended claims are intended to cover unforeseeable embodiments with insubstantial differences that are within the spirit of the claims.

What I claim is:

1. A free-standing device to be placed on a flat surface for filing an animal's nails having a quick without human intervention comprising:

a) a plurality of cylindrical rods each having a first end, a second end and a curved surface extending from said first end to said second end, said rods being arranged to be parallel to one another, each rod having a grit material on at least a portion of said curved surface,

b) a fixedly positioned casing having a first end, a second end, a top, a bottom, and a plurality of cutouts on the top of said casing, the top of said casing is flat and positioned over said plurality of rods and sized to cover said plurality of rods and nest said plurality of rods therein, the bottom of said casing being flat and positioned directly below said plurality of rods and shaped to rest on the flat surface,

c) a motor connected to and rotates each rod simultaneously within the casing, said motor rotates the plurality of rods at a pre-determined speed to cause the casing to vibrate, and

d) a power source, connected to and provides power to the motor,

wherein an animal is adapted to mount the top of said fixedly positioned casing anywhere between said first end to said second end of said casing without human intervention while all the animal's nails are adapted to abut the plurality of rotatable rods through the plurality of cutouts on the top of said casing and wherein the vibration of said casing causes the nails' quick to recede.

2. The device for filing an animal's nails of claim **1** wherein said cutouts are designed and sized to accept the nails of an animal therethrough when an animal is standing on said fixedly positioned casing and the nails are in contact with said curved surface of said plurality of rods.

3. The device for filing an animal's nails of claim **1** further comprising:

a removable tray below the rods to catch debris that results from the trimming of the animal's nails.

4. The device for filing an animal's nails of claim **1** further comprising:

a sensor attached to said casing that turns on said power source when an animal mounts itself on said casing.

5. The device of claim **1** wherein the rods rotate at a speed of 10-14 revolutions a minute to cause the quick of the animals' nails to recede.

6. A device for filing an animal's nail having a quick attached to a cage comprising:

a) a rotating cylindrical rod with a first end, a second end, a first diameter and a curved surface extending from said first end to said second end having a grit material on at least a portion of said curved surface,

b) an elongated casing fixedly positioned inside the cage having a first end, a second end, a second diameter, a top, a bottom, and a longitudinal cutout on said bottom of said casing extending substantially from said first end to said second end of said casing, said casing is internally sized to cooperatively mate with and concentrically nest said rod therein, wherein said first diameter of said rotating rod is smaller than said second diameter of said casing, said top of said casing having no openings to expose said rod and completely covers said rod from said first end to said second end of said rod, said cutout on said bottom of said casing exposes said rotating rod,

c) a motor connected to and rotates the rod within the casing, said motor rotates the rod at a pre-determined speed to cause said casing to vibrate,

d) a power source connected to and provides power to the motor,

e) means for removably attaching the fixedly positioned casing to the cage,

wherein an animal is adapted to mount the top of said fixedly positioned casing anywhere between said first end to said second end of said casing without human intervention while the animal's nail is adapted to abut the rotatable rod through the cutout on the bottom of

said casing and wherein the vibration of said casing causes the nail's quick to recede and its nails to be filed when it is standing on said casing.

7. The device of claim **6** further comprising:

a. a sensor connected to said motor that turns on said power source when an animal mounts itself on said stationary casing.

8. The device of claim **6** wherein the rod rotates at a speed of 10-14 revolutions a minute to cause the quick of the animals' nails to recede.

9. A method of filing an animal's nails having a quick without human intervention in a cage, comprising the steps of:

a) providing at least one cylindrical rod having a first end, a second end, a first diameter, and a curved surface extending from said first end to said second end, each rod having a grit material on at least a portion of said curved surface,

b) providing an elongated casing fixedly positioned inside the cage having a first end, a second end, a second diameter, a top, a bottom, and a longitudinal cutout on the bottom of said casing, extending substantially from said first end to said second end of said casing, the top of said casing having no openings to expose said rod and is sized to completely cover from said first end to said second end of said rod and concentrically nest said rod therein, wherein said first diameter of said rotating rod is smaller than said second diameter of said casing, said cutout on said bottom of said casing exposes said rotating rod,

c) providing a motor connected to and rotates the rod within the casing, and

d) providing a power source, connected to and provides power to the motor,

e) an animal standing on the top of said casing without human intervention;

f) said animal's nails are adapted to abut the rotatable rod through said cutout on the bottom of said casing and wherein the vibration of said casing causes the nail's quick to recede;

g) rotating said motor at a predetermined speed to rotate the rod and cause the casing to vibrate; and

h) filing said animal's nails with said grit material on said rod.

* * * * *